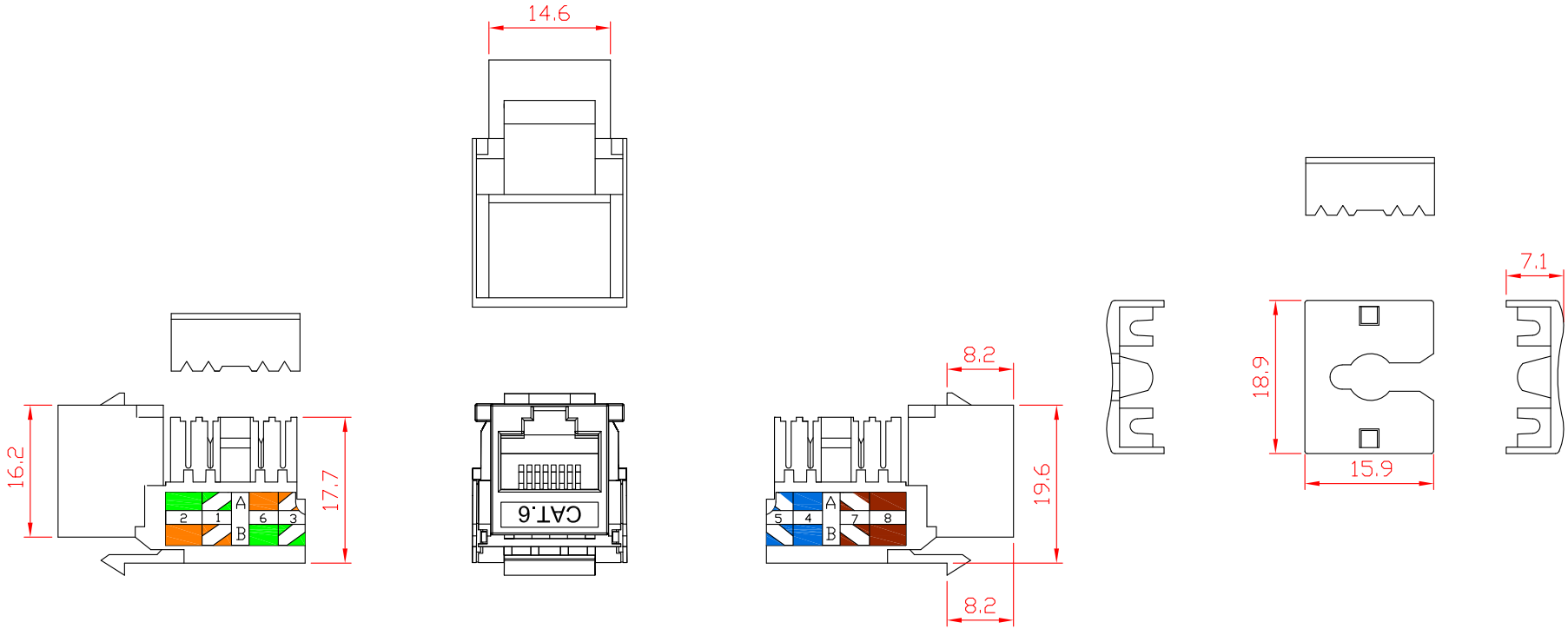

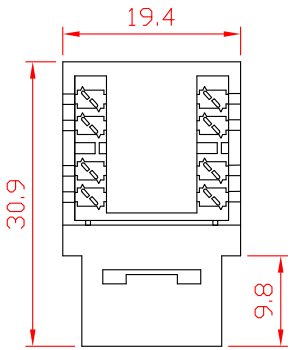

NOTES:

ELECTRICAL:

1. VOLTAGE RATING:125 VAC RMS
2. CURRENT RATING:1.5AMP
3. CONTACT RESISTANCE:100MILLIOHMS MAX
4. INSULATION RESISTANCE:1000 MEGOHMS MIN @500 VDC
5. DIELECTRIC STRENGTH:750 VAC RMS 60Hz,1MIN

ENVIRONMENTAL:

1. STORAGE:-40° TO +85°
2. OPERATION:0° TO 70°

MECHANICAL:

1. HOUSING MATERIAL:PC
2. INSERT MATERIAL:FAME RETARDANCY PBT
3. PCB MATERIAL:FR-4 T=1.6mm
4. CONTACT MATERIAL:PHOSPHOR BRONZE STAMP PIN T=0.30mm
5. IDC CONTACT MATERIAL:PHOSPHOR BRONZE T=0.50mm WITH TIN PLATING
6. RJ11 JACK ;LIFE:750 TIMES MIN
7. IDC LIFE:200 TIMES MIN
8. WIRE:AWG 22-26

SYM	Number	Bill No. of Alteration	Signature	Date

Drawn	Ding jian bo	2015.12.29	Tolerance
Checked	Ge pei jun	2015.12.29	0.00-20.00 ±0.10 20.00-50.00 ±0.15 50.00-100.00 ±0.20 100.00- ±0.25 Angle ±30'
Approved	Wang wei jun	2015.12.29	

彤润 TRUN® NINGBO TONGRUN ELECTRONICS CO.,LTD

Material				Item No.	TR-LY-KJ6-01-A
Angles Projection	Size	Scale	Unit	Part Name	UTP Cat.6 Keystone Jack
	A4	X:1	mm		
Sheet	1 OF 1	Version: A/0		ERP Part No.	